ZED-TCMR-M

ZigBee remote control thermostat with relay output

Key Features

- Full remotely configurable thermostat
- Wide 3 digit display
- 4 buttons
- Bi-stable relay output to achieve low power consumption
- Battery powered
- Internal antenna

The ZED-TCMR-M is a radio battery powered thermostat that can be connected to a PC-SCADA or a PLC through ZigBee and one of the Gateway that belong to the 4-noks products family. It is equipped with a wide LCD display and 4 buttons in order to have a simple user interface. It is also equipped with a bi-stable relay and so it may replace an ordinary thermostat giving a remotely controlled system.

This thermostat has two different operating modes to activate output: heating/cooling mode or heating set temperature mode (Auto/Comfort/Background/Frost protection). This device periodically makes available the values of room temperature, current temperature and the operating mode currently active. All functions are remotely controllable.

Typical Application

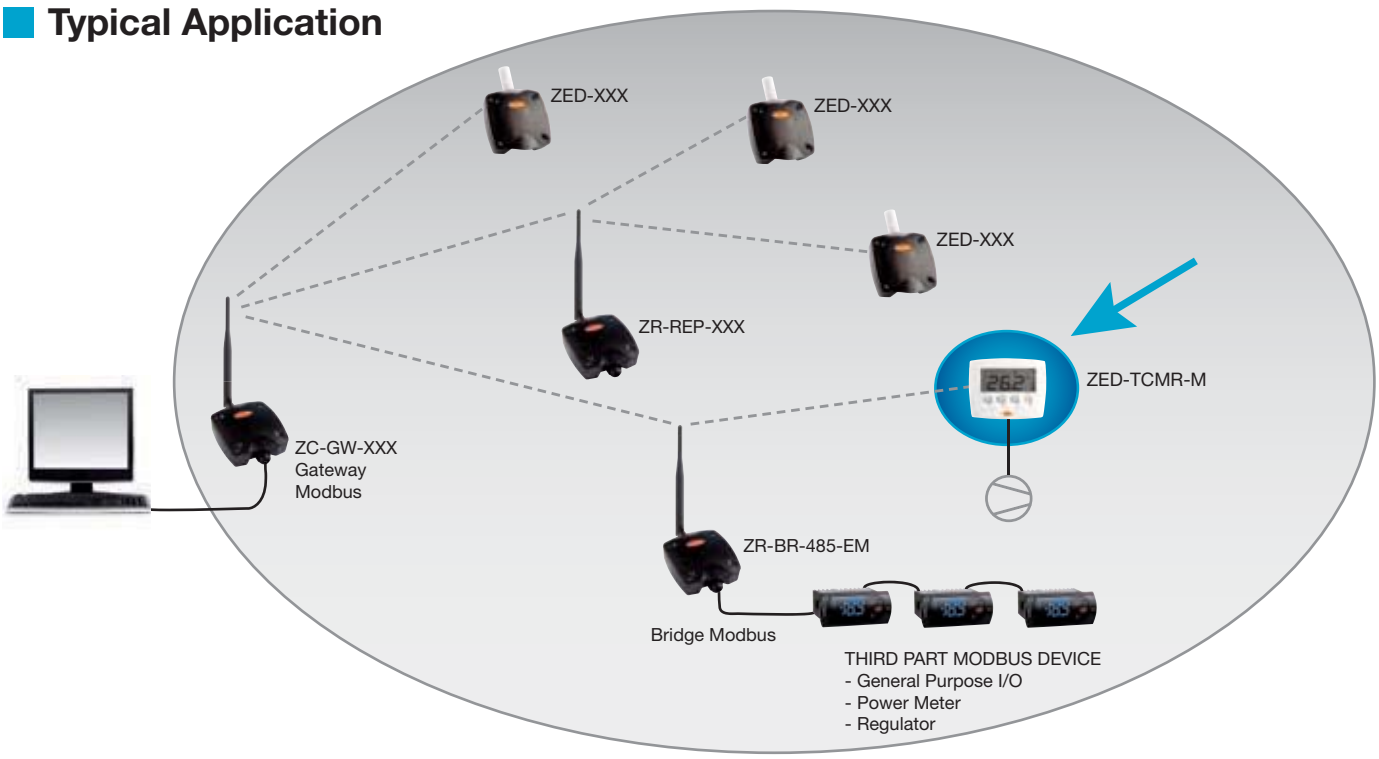

Technical Specs

General characteristics	Chip Ember EM250 Compatible IEEE 802.15.4 Stack EmberZnet 3.4.x (ZigBee PRO) Modbus/RTU Wall mounting with screws
RF characteristics	Frequency: 2405 MHz ÷ 2480 MHz Modulation: DSSS Nominal transmission power: 2mW (3 dBm) Reception sensitivity: -95 dBm Internal antenna gain: 0 dB Coverage outdoor/indoor: 100m/30m
Supply	3 AAA Batteries 1,5V Battery life: 2 years in case of one transmission every 5 minutes at 20ºC
Thermostat	Auto/Comfort/Background/Frost Protection operating mode (remotely configurable) Heating/Cooling operating mode (remotely configurable) Hysteresis: ±1ºC (remotely configurable) Set temperature range +8 ÷ 32ºC (remotely configurable) Temperature resolution: 0,1ºC Temperature accuracy: ±1ºC
Relay	Bistable with 250V/5A rated contacts
Environment parameters	Operating temperature: -10 +60ºC; <80% U.R. not condensing Storage temperature: -20 +70ºC; <80% U.R. not condensing Degree of protection: IP 30
Compliant with 2006/95/EEC, 89/336/EEC, 99/5/EEC directives Reference Norms:	ETSI EN 300 328: Radio Compatibility for digitals wide band transmissions ETSI EN 301 489: Radio Compatibility EN 61000-6-2: Electromagnetic Compatibility - Emissions EN 61000-6-3: Electromagnetic Compatibility - Immunity EN 60950-1: Electric Safety

Dimensions (mm)

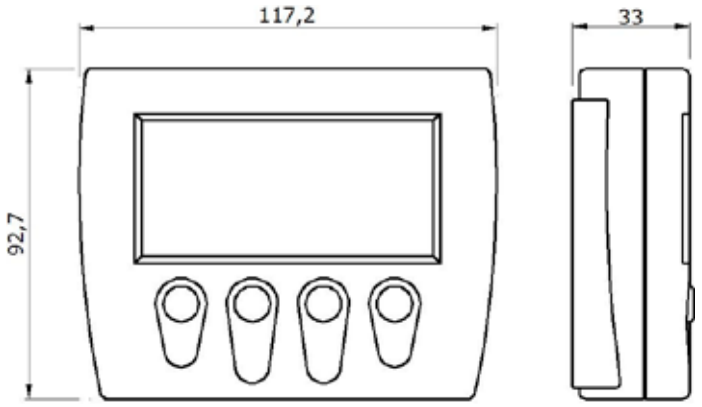

Rev 2.5 23/12/2009

ZB-Connection is a 4-noks brand

4-noks is a ZigBee Member

4-noks

4-noks s.r.l.
Via Dei Gelsi, 19
31010 Godega di Sant'Urbano - Treviso - Italy
T. +39 0438.19190013 | info@4-noks.com

4-noks Distributor:

2-EMBEDCOM

2Embedcom, s.l.
C/ Alemanya 45, Local 2
08303 Mataró - Barcelona - Spain
T. +34 93 757 76 59 | comercial@2embedcom.com